SECTION MA

CONTENTS

PRECAUTIONS AND PREPARATION 2
Supplemental Restraint System (SRS) "AIR BAG" 2
Special Service Tool 2
GENERAL MAINTENANCE 3
PERIODIC MAINTENANCE 5
Schedule 1 6
Schedule 2 7
RECOMMENDED FLUIDS AND LUBRICANTS 8
Fluids and Lubricants 8
SAE Viscosity Number 9
Antifreeze Coolant Mixture Ratio 9
ENGINE MAINTENANCE 10
Checking Drive Belts 10
Changing Engine Coolant 11
Checking Fuel Lines 12
Changing Fuel Filter 12
Changing Air Cleaner Filter 12
Changing Engine Oil 13
Changing Oil Filter 13
Changing Spark Plugs 14
Checking EVAP Vapor Purge Lines 15
Changing Positive Crankcase Ventilation (PCV) Filter 15
CHASSIS AND BODY MAINTENANCE 16
Checking Exhaust System 16
Checking Clutch Fluid Level and Leaks 16
Checking M/T Oil 16
Changing M/T Oil 16
Checking Water Entry — For 4WD models 16
Checking A/T Fluid 16
Changing A/T Fluid 17
Checking Transfer Fluid 17
Changing Transfer Fluid 18
Checking Propeller Shaft 18
Checking Differential Gear Oil 18
Changing Differential Gear Oil 19
Balancing Wheels 19
Tire Rotation 19
Checking Brake Fluid Level and Leaks 20
Checking Brake System 20
Checking Disc Brake 20
Checking Drum Brake 20
Checking Steering Gear and Linkage 21
Checking Power Steering Fluid and Lines 21
Checking Steering Gear Oil Level and Leaks 21
Lubricating Hood Latches, Locks and Hinges 22
Checking Seat Belts, Buckles, Retractors, Anchors and Adjusters 23
SERVICE DATA AND SPECIFICATIONS (SDS) 24
Engine Maintenance 24
Chassis and Body Maintenance 24

Supplemental Restraint System (SRS) "AIR BAG"

The Supplemental Restraint System "Air Bag", used along with a seat belt, helps to reduce the risk or severity of injury to the driver in a frontal collision. The Supplemental Restraint System consists of an air bag module (located in the center of the steering wheel), a diagnosis sensor unit, warning lamp, wiring harness, a crash zone sensor (4WD models) and spiral cable. Information necessary to service the system safely is included in the **RS section** of this Service Manual.

WARNING:

- **To avoid rendering the SRS inoperative, which could increase the risk of personal injury or death in the event of a collision which would result in air bag inflation, all maintenance must be performed by an authorized NISSAN dealer.**
- **Improper maintenance, including incorrect removal and installation of the SRS, can lead to personal injury caused by unintentional activation of the system.**
- **Do not use electrical test equipment on any circuit related to the SRS unless instructed to in this Service Manual. SRS wiring harnesses are covered with yellow insulation either just before the harness connectors or for the complete harness, for easy identification.**

Special Service Tool

The actual shapes of Kent-Moore tools may differ from those of special service tools illustrated here.

Tool number (Kent-Moore No.) Tool name	Description
KV10105900 (J34274) Oil filter cap wrench	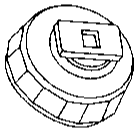 NT005 Removing oil filter

General maintenance includes those items which should be checked during the normal day-to-day operation of the vehicle. They are essential if the vehicle is to continue operating properly. The owners can perform checks and inspections themselves or they can have their NISSAN dealers do them.

Item	Reference page
OUTSIDE THE VEHICLE The maintenance items listed here should be performed from time to time, unless otherwise specified.	
Tires Check the pressure, including the spare, with a gauge periodically when at a service station, and adjust to the specified pressure if necessary. Check carefully for damage, cuts or excessive wear.	—
Wheel nuts When checking the tires, make sure no nuts are missing, and check for any loose nuts. Tighten if necessary.	—
Tire rotation Tires should be rotated every 12,000 km (7,500 miles).	MA-19
Wheel alignment and balance If the vehicle pulls to either side while driving on a straight and level road, or if you detect uneven or abnormal tire wear, there may be a need for wheel alignment. If the steering wheel or seat vibrates at normal highway speeds, wheel balancing may be needed.	MA-19, FA-8
Windshield wiper blades Check for cracks or wear if they do not wipe properly.	—
Doors and engine hood Check that all doors, engine hood and tailgate operate smoothly. Also make sure that all latches lock securely. Lubricate if necessary. Make sure that the secondary latch keeps the hood from opening when the primary latch is released. When driving in areas using road salt or other corrosive materials, check lubrication frequently.	MA-22
Lamps Make sure that the headlamps, stop lamps, tail lamps, turn signal lamps, and other lamps are all operating properly and installed securely. Also check headlamp aim.	—
INSIDE THE VEHICLE The maintenance items listed here should be checked on a regular basis, such as when performing periodic maintenance, cleaning the vehicle, etc.	
Warning lamps and buzzers/chimes Make sure that all warning lamps and buzzers/chimes are operating properly.	—
Windshield wiper and washer Check that the wipers and washer operate properly and that the wipers do not streak.	—
Windshield defroster Check that the air comes out of the defroster outlets properly and in sufficient quantity when operating the heater or air conditioning.	—
Steering wheel Check that it has the specified play. Be sure to check for changes in the steering condition, such as excessive play, hard steering or strange noises. **Free play: Less than 35 mm (1.38 in)**	ST-7
Seats Check seat position controls such as seat adjusters, seatback recliner, etc. to make sure they operate smoothly and that all latches lock securely in every position. Check that the head restraints move up and down smoothly and that the locks (if equipped) hold securely in all latched positions. Check jump seats for smooth operation.	—
Seat belts Check that all parts of the seat belt system (e.g., buckles, anchors, adjusters and retractors) operate properly and smoothly and are installed securely. Check the belt webbing for cuts, fraying, wear or damage.	MA-23
Clutch pedal Make sure the pedal operates smoothly and check that it has the proper free play.	CL-5
Brakes Check that the brake does not pull the vehicle to one side when applied.	—
Brake pedal and booster Check the pedal for smooth operation and make sure it has the proper distance under it when depressed fully. Check the brake booster function. Be sure to keep floor mats away from the pedal.	BR-11, 16
Parking brake Check that the lever has the proper travel and make sure that the vehicle is held securely on a fairly steep hill when only the parking brake is applied.	BR-27

Item	Reference page
Automatic transmission "Park" mechanism Check that the lock release button on the selector lever operates properly and smoothly. On a fairly steep hill check that the vehicle is held securely with the selector lever in the "P" position without applying any brakes.	—
UNDER THE HOOD AND VEHICLE The maintenance items listed here should be checked periodically (e.g., each time you check the engine oil or refuel).	
Windshield washer fluid Check that there is adequate fluid in the tank.	—
Engine coolant level Check the coolant level when the engine is cold.	MA-11
Radiator and hoses Check the front of the radiator and clean off any dirt, insects, leaves, etc., that may have accumulated. Make sure the hoses have no cracks, deformation, deterioration or loose connections.	—
Brake and clutch fluid levels Make sure that the brake and clutch fluid levels are between the "MAX" and "MIN" lines on the reservoir.	MA-16, 20
Battery Check the fluid level in each cell. It should be between the "MAX" and "MIN" lines.	—
Engine drive belts Make sure that no belt is frayed, worn, cracked or oily.	MA-10
Engine oil level Check the level on the dipstick after parking the vehicle on a level spot and turning off the engine.	MA-13
Power steering fluid level and lines Check the level on the dipstick with the engine off. Check the lines for improper attachment, leaks, cracks, etc.	MA-21
Automatic transmission fluid level Check the level on the dipstick after putting the selector lever in "P" with the engine idling.	MA-16
Exhaust system Make sure there are no loose supports, cracks or holes. If the sound of the exhaust seems unusual or there is a smell of exhaust fumes, immediately locate the trouble and correct it.	MA-16
Underbody The underbody is frequently exposed to corrosive substances such as those used on icy roads or to control dust. It is very important to remove these substances, otherwise rust will form on the floor pan, frame, fuel lines and around the exhaust system. At the end of winter, the underbody should be thoroughly flushed with plain water, being careful to clean those areas where mud and dirt can easily accumulate.	—
Fluid leaks Check under the vehicle for fuel, oil, water or other fluid leaks after the vehicle has been parked for a while. Water dripping from the air conditioner after use is normal. If you should notice any leaks or gasoline fumes in evidence, check for the cause and correct it immediately.	—

Two different maintenance schedules are provided, and should be used, depending upon the conditions under which the vehicle is mainly operated. **After 60,000 miles (96,000 km) or 48 months, continue the periodic maintenance at the same mileage/time intervals.**

SCHEDULE 1

Follow Periodic Maintenance Schedule 1 if your driving habits frequently include one or more of the following driving conditions:

- Repeated short trips of less than 5 miles (8 km).
- Repeated short trips of less than 10 miles (16 km) with outside temperatures remaining below freezing.
- Operating in hot weather in stop-and-go "rush hour" traffic.
- Extensive idling and/or low speed driving for long distances, such as police, taxi or door-to-door delivery use.
- Driving in dusty conditions.
- Driving on rough, muddy, or salt spread roads.
- Towing a trailer, using a camper or a car-top carrier.

SCHEDULE 2

Follow Periodic Maintenance Schedule 2 if none of the driving conditions shown in Schedule 1 apply to your driving habits.

Maintenance for off-road driving (4x4 only)

Whenever you drive off-road through sand, mud or water, more frequent maintenance may be required of the following items:

▲ Brake pads and discs
▲ Brake lining and drums
▲ Brake lines and hoses
▲ Wheel bearing grease and free-running hub grease
▲ Differential gear oil, transmission and transfer fluid
▲ Steering linkage
▲ Propeller shaft and drive shafts
▲ Air cleaner filter
▲ Clutch housing (Check water entry. Refer to MA-16.)

Schedule 1

Abbreviations: R = Replace I = Inspect. Correct or replace if necessary.

[ ]: At the mileage intervals only

MAINTENANCE OPERATION		MAINTENANCE INTERVAL																
Perform at number of miles, kilometers or months, whichever comes first.	Miles x 1,000	3.75	7.5	11.25	15	18.75	22.5	26.25	30	33.75	37.5	41.25	45	48.75	52.5	56.25	60	Reference page
	(km x 1,000)	(6)	(12)	(18)	(24)	(30)	(36)	(42)	(48)	(54)	(60)	(66)	(72)	(78)	(84)	(90)	(96)	
	Months	3	6	9	12	15	18	21	24	27	30	33	36	39	42	45	48	
Emission control system maintenance																		
Drive belts									I*								I*	MA-10
Air cleaner filter	See NOTE (1)								[R]								[R]	MA-12
Positive crankcase ventilation (PCV) filter	See NOTE (2)								[R]								[R]	MA-15
Vapor lines									I*								I*	MA-15
Fuel lines									I*								I*	MA-12
Fuel filter	See NOTE (2)*																	MA-12
Engine coolant	See NOTE (3)																R*	MA-11
Engine oil		R	R	R	R	R	R	R	R	R	R	R	R	R	R	R	R	MA-13
Engine oil filter		R	R	R	R	R	R	R	R	R	R	R	R	R	R	R	R	MA-13
Spark plugs									[R]								[R]	MA-14
Chassis and body maintenance																		
Brake lines & cables					I				I				I				I	MA-20
Brake pads, discs, drums & linings			I		I		I		I		I		I		I		I	MA-20
Manual and automatic transmission, transfer fluid & differential gear oil (exc. LSD)	See NOTE (4)				I				I				I				I	MA-16, 17, 18, 19
Limited-slip differential (LSD) gear oil	See NOTE (4)				I				R				I				R	MA-19
Steering gear (box) & linkage, (steering damper 4X4), axle & suspension parts			I		I		I		I		I		I		I		I	MA-21, FA-5, RA-4
Drive shaft boots & propeller shaft (4X4)			I		I		I		I		I		I		I		I	MA-18, FA-14, PD-9
Steering linkage ball joints & front suspension ball joints			I		I		I		I		I		I		I		I	MA-21, FA-5
Front wheel bearing grease (4x2)									I								I	FA-6
Front wheel bearing grease & free-running hub grease (4X4)	See NOTE (5)				I				R				I				R	FA-6, 17
Exhaust system			I		I		I		I		I		I		I		I	MA-16
Air bag system	See NOTE (6)																	

NOTE: (1) If operating mainly in dusty conditions, more frequent maintenance may be required.
(2) If vehicle is operated under extremely adverse weather conditions or in areas where ambient temperatures are either extremely low or extremely high, the filters might become clogged. In such an event, replace them immediately.
(3) After 60,000 miles (96,000 km) or 48 months, replace every 30,000 miles (48,000 km) or 24 months.
(4) If towing a trailer, using a camper or a car-top carrier, or driving on rough or muddy roads, change (not just inspect) oil at every 30,000 miles (48,000 km) or 24 months except for LSD. Change LSD gear oil every 15,000 miles (24,000 km) or 12 months.
(5) If operating frequently in water, replace grease every 3,750 miles (6,000 km) or 3 months.
(6) Inspect the air bag system 10 years after the date of manufacture noted on the FMVSS certification label.
★ Maintenance items and intervals with "*" are recommended by NISSAN for reliable vehicle operation. The owner need not perform such maintenance in order to maintain the emission warranty or manufacturer recall liability. Other maintenance items and intervals are required.

Schedule 2

Abbreviations: R = Replace I = Inspect. Correct or replace if necessary.

[ ]: At the mileage intervals only

MAINTENANCE OPERATION		MAINTENANCE INTERVAL								
Perform at number of miles, kilometers or months, whichever comes first.	Miles x 1,000	7.5	15	22.5	30	37.5	45	52.5	60	Reference page
	(km x 1,000)	(12)	(24)	(36)	(48)	(60)	(72)	(84)	(96)	
	Months	6	12	18	24	30	36	42	48	
Emission control system maintenance										
Drive belts					I*				I*	MA-10
Air cleaner filter					[R]				[R]	MA-12
Positive crankcase ventilation (PCV) filter	See NOTE (1)				[R]				[R]	MA-15
Vapor lines					I*				I*	MA-15
Fuel lines					I*				I*	MA-12
Fuel filter	See NOTE (1)*									MA-12
Engine coolant	See NOTE (2)								R*	MA-11
Engine oil		R	R	R	R	R	R	R	R	MA-13
Engine oil filter		R	R	R	R	R	R	R	R	MA-13
Spark plugs					[R]				[R]	MA-14
Chassis and body maintenance										
Brake lines & cables			I		I		I		I	MA-20
Brake pads, discs, drums & linings			I		I		I		I	MA-20
Manual and automatic transmission, transfer fluid & differential gear oil (exc. LSD)			I		I		I		I	MA-16, 17, 18, 19
Limited-slip differential (LSD) gear oil			I		R		I		R	MA-19
Steering gear (box) & linkage, (steering damper 4x4), axle & suspension parts					I				I	MA-21, FA-5, RA-4
Drive shaft boots & propeller shaft (4x4)			I		I		I		I	MA-18, FA-14, PD-9
Steering linkage ball joints & front suspension ball joints									I	MA-21, FA-5
Front wheel bearing grease (4x2)					I				I	FA-6
Front wheel bearing grease & free-running hub grease (4x4)			I		R		I		R	FA-6, 17
Exhaust system					I				I	MA-16
Air bag system	See NOTE (3)									

NOTE: (1) If vehicle is operated under extremely adverse weather conditions or in areas where ambient temperatures are either extremely low or extremely high, the filters might become clogged. In such an event, replace them immediately.
(2) After 60,000 miles (96,000 km) or 48 months, replace every 30,000 miles (48,000 km) or 24 months.
(3) Inspect the air bag system 10 years after the date of manufacture noted on the FMVSS certification label.
★ Maintenance items and intervals with "*" are recommended by NISSAN for reliable vehicle operation. The owner need not perform such maintenance in order to maintain the emission warranty or manufacturer recall liability. Other maintenance items and intervals are required.

Fluids and Lubricants

			Capacity (Approximate)			Recommended Fuel/Lubricants
			US measure	Imp measure	Liter	
Engine oil (Refill)						
2WD	With oil filter		4-1/8 qt	3-3/8 qt	3.9	● API SG or SH and Energy Conserving II*1 ● API Certification Mark*1
	Without oil filter		3-3/4 qt	3-1/8 qt	3.5	
4WD	With oil filter		4-3/8 qt	3-5/8 qt	4.1	
	Without oil filter		4 qt	3-3/8 qt	3.8	
Cooling system (With reservoir)						
		2WD	8-5/8 qt	7-1/8 qt	8.1	Antifreeze coolant (Ethylene glycol base) 50/50 mixture
		4WD	9-1/2 qt	7-7/8 qt	9.0	
Manual transmission gear oil	FS5W71C	2WD	4-1/4 pt	3-1/2 pt	2.0	API GL-4*1
		4WD	10-3/8 pt	8-5/8 pt	4.9	
Transfer fluid			2-3/8 qt	2 qt	2.2	Type DEXRON™
Manual steering fluid			1-3/8 pt	1-1/8 pt	0.62	API GL-4*1
Differential carrier gear oil						
Rear:	H190A		3-1/8 pt	2-5/8 pt	1.5	Standard differential gear: API GL-5*1 Limited-slip differential (LSD) gear: Use only LSD gear oil API GL-5 or SAE 80W-90*4 approved for Nissan LSD*5.
	C200		2-3/4 pt	2-1/4 pt	1.3	
	H233B		5-7/8 pt	4-7/8 pt	2.8	
Front (4WD):	R180A		2-3/4 pt	2-1/4 pt	1.3	
Automatic transmission fluid			8-3/8 qt	7 qt	7.9	Nissan Matic "D" (Continental U.S. and Alaska) or Genuine Nissan Automatic Transmission Fluid (Canada)*2
Power steering fluid			—	—	—	Type DEXRON™ IIE, DEXRON™ III or equivalent
Brake and clutch fluid			—	—	—	Genuine Nissan Brake Fluid*3 or equivalent DOT 3 (US FMVSS No. 116)
Multi-purpose grease			—	—	—	NLGI No. 2 (Lithium soap base)
Free-running hub grease (Auto-lock)			—	—	—	Genuine Nissan grease or equivalent

*1: For further details, see "SAE Viscosity Number".
*2: Dexron® III/Mercon® or equivalent may also be used. Outside the continental United States and Alaska contact a NISSAN dealership for more information regarding suitable fluids, including recommended brand(s) of Dexron® III/Mercon® or Dexron® IIE/Mercon® Automatic Transmission Fluid.
*3: Available in mainland U.S.A. through your Nissan dealer.
*4: SAE 90 is acceptable in ambient temperatures above −18°C (0°F).
*5: Contact a Nissan dealer for a list of approved oils.

SAE Viscosity Number

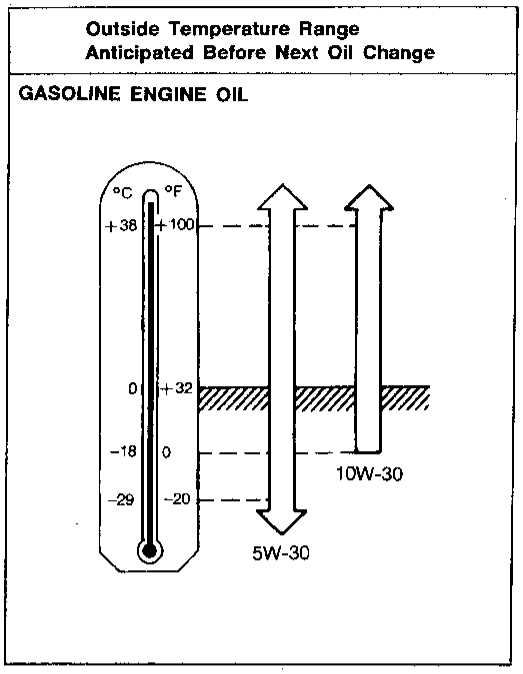

SMA796CB

SAE 5W-30 viscosity oil is preferred for all temperatures. SAE 10W-30 viscosity oil may be used if the ambient temperature is above –18°C (0°F).

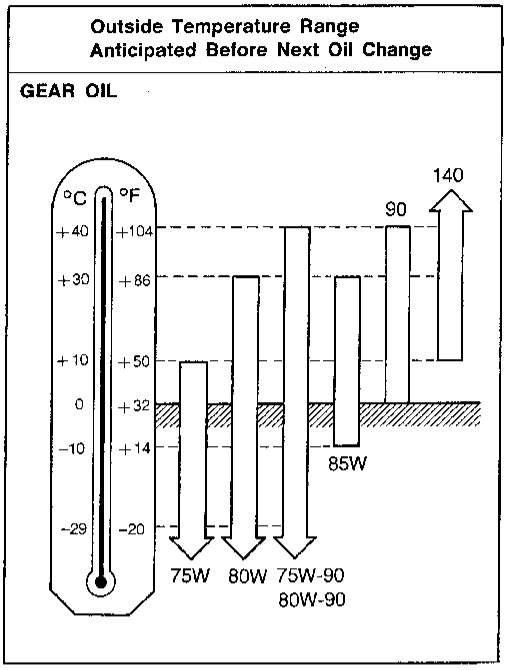

TI0003

75W-90 for transmission, and 80W-90 for differential are preferable if the ambient temperature is below 40°C (104°F).

Antifreeze Coolant Mixture Ratio

The engine cooling system is filled at the factory with a high-quality, year-round, antifreeze coolant solution. The antifreeze solution contains rust and corrosion inhibitors. Additional cooling system additives are not necessary.

CAUTION:

When adding or replacing coolant, be sure to use only an ethylene glycol antifreeze with the proper mixture ratio of 50% antifreeze 50% soft water.

Outside temperature down to		Anti-freeze	Soft water
°C	°F		
–35	–30	50%	50%

Other types of coolant solutions may damage the cooling system.

Checking Drive Belts

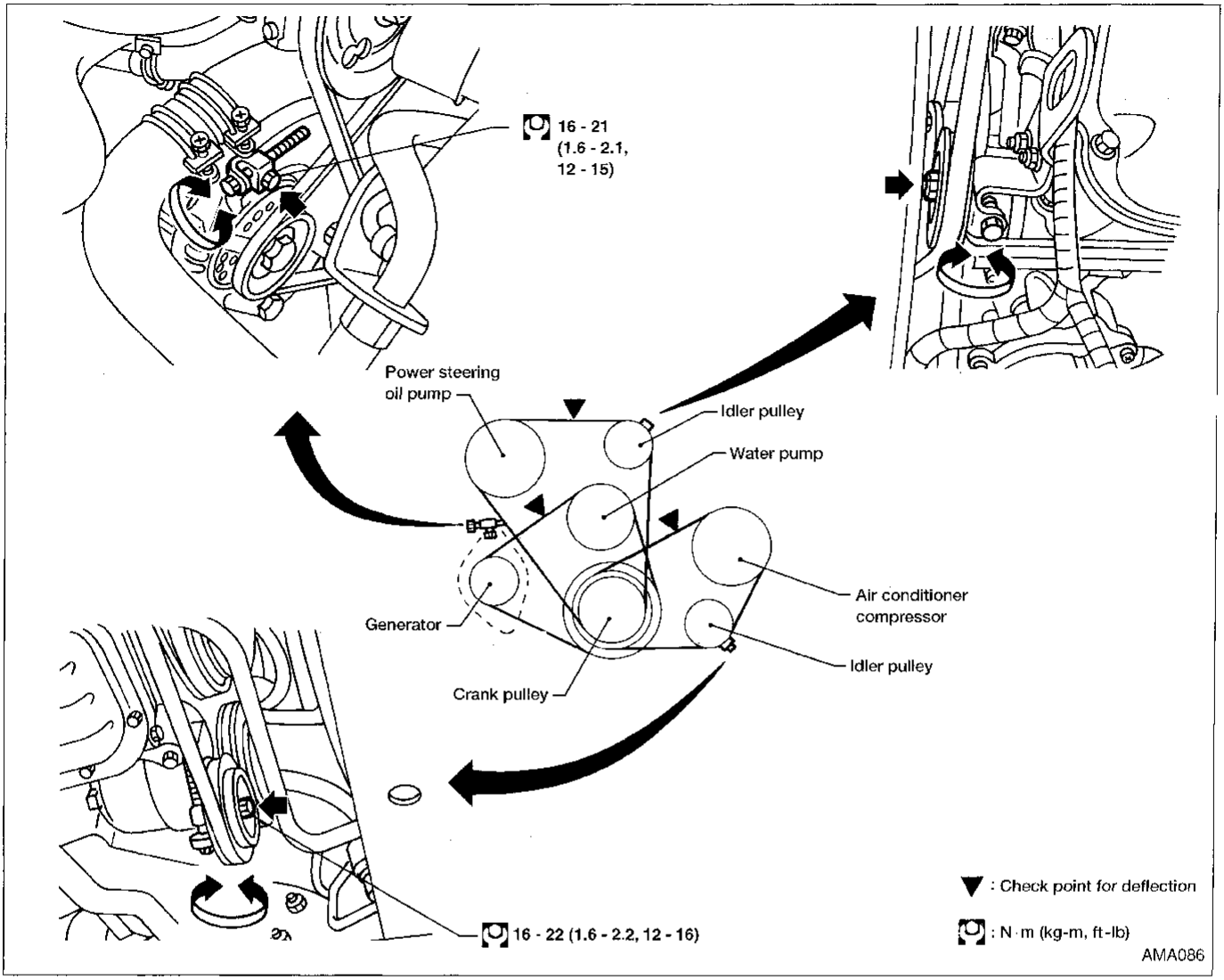

1. Inspect for cracks, fraying, wear or oil. If necessary, replace with a new one.
2. Inspect drive belt deflections by pushing midway between pulleys.

Inspect drive belt deflections when engine is cold.

Adjust if belt deflections exceed the limit.
Belt deflection:

Unit: mm (in)

	Used belt deflection		Deflection of new belt
	Limit	Deflection after adjustment	
Generator	17 (0.67)	10 - 12 (0.39 - 0.47)	8 - 10 (0.31 - 0.39)
Air conditioner compressor	16 (0.63)	10 - 12 (0.39 - 0.47)	8 - 10 (0.31 - 0.39)
Power steering oil pump	15 (0.59)	9 - 11 (0.35 - 0.43)	7 - 9 (0.28 - 0.35)
Applied pushing force	98 N (10 kg, 22 lb)		

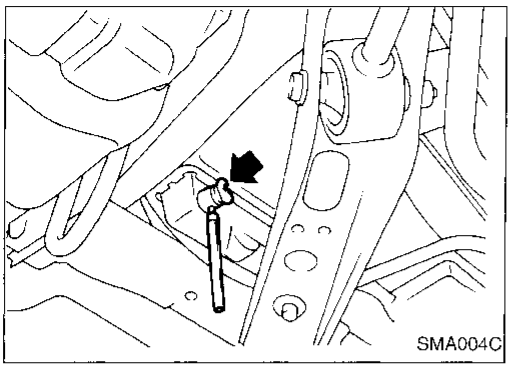

Changing Engine Coolant

WARNING:
To avoid being scalded, never change the coolant when the engine is hot.

1. Move heater "TEMP" control lever all the way to "HOT" position or the highest temperature position.
2. Open drain cock at the bottom of radiator, and remove radiator cap.

Be careful not to allow coolant to contact drive belts.

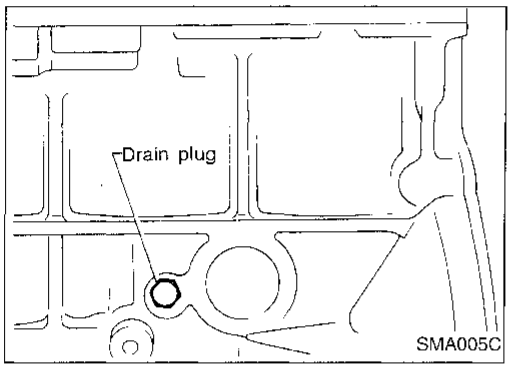

3. Remove cylinder block drain plug.
4. Close drain cock and tighten drain plug securely.
- **Apply sealant to the thread of drain plug.**
  [O]: 34 - 44 N·m (3.5 - 4.5 kg-m, 25 - 33 ft-lb)
5. Open air relief plug.
6. Fill radiator with water and close air relief plug and radiator cap.
7. Run engine and warm it up sufficiently.
8. Race engine 2 or 3 times under no-load.
9. Stop engine and wait until it cools down.
10. Repeat step 2 through step 9 until clear water begins to drain from radiator.
11. Drain water.

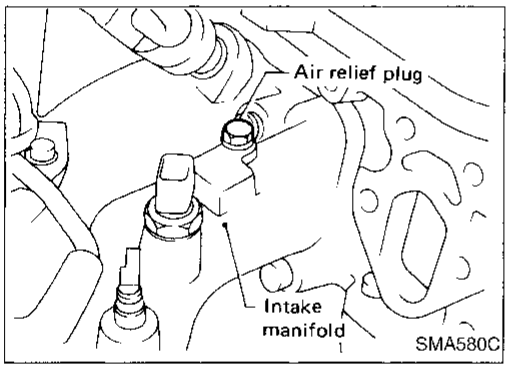

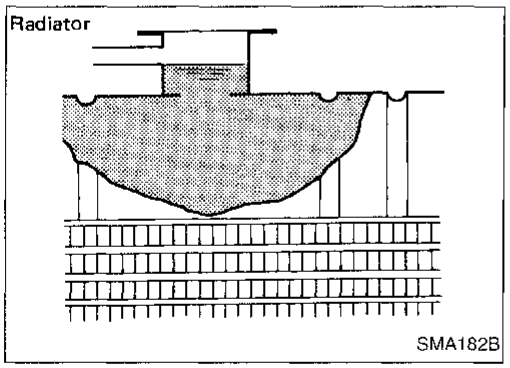

12. Open radiator cap and air relief plug.
13. Fill radiator with coolant up to specified level.

For coolant mixture ratio, refer to MA-9.

Unit: ℓ (US qt, Imp qt)

	Coolant capacity	
	2WD	4WD
Without reservoir tank	7.3 (7-3/4, 6-3/8)	8.2 (8-5/8, 7-1/4)
Reservoir tank	0.8 (7/8, 3/4)	

Pour coolant through coolant filler neck slowly to allow air in system to escape.

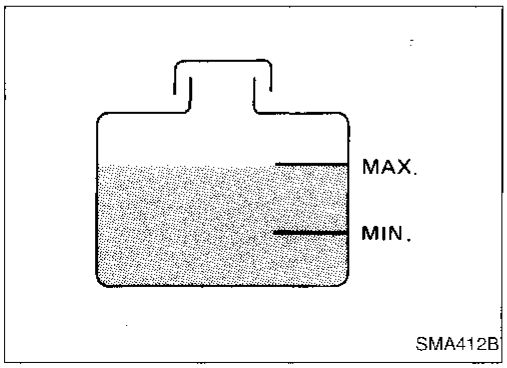

14. Close air relief plug.
15. Remove reservoir tank, drain coolant, then clean reservoir tank.
16. Install reservoir tank and fill it with coolant up to "MAX" level and then install radiator cap.
17. Run engine and warm it up sufficiently.
18. Race engine 2 or 3 times under no-load.
19. Stop engine and cool it down, then add coolant as necessary.
- **Clean excess coolant from engine.**

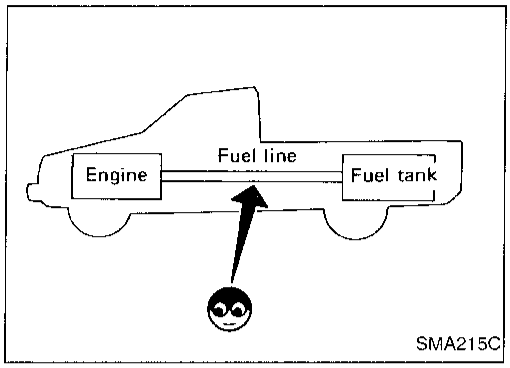

Checking Fuel Lines

Inspect fuel lines and tank for improper attachment, leaks, cracks, damage, chafing or deterioration.
If necessary, repair or replace.

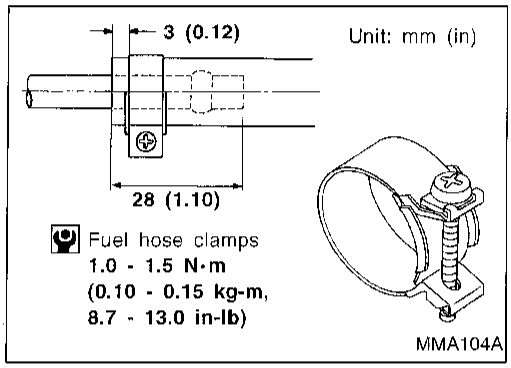

CAUTION:
Tighten high-pressure rubber hose clamp so that clamp end is 3 mm (0.12 in) from hose end.
Tightening torque specifications are the same for all rubber hose clamps.
Ensure that screw does not contact adjacent parts.

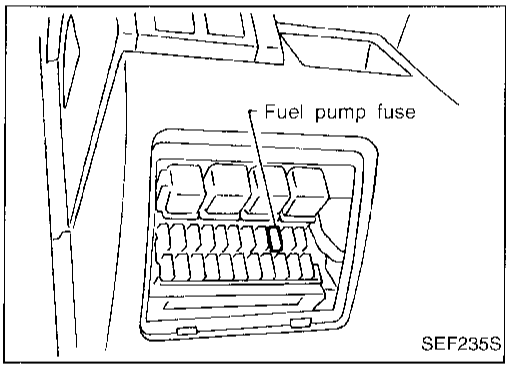

Changing Fuel Filter

WARNING:
Before removing fuel filter, release fuel pressure from fuel line.

1. Remove fuse for fuel pump.
2. Start engine.
3. After engine stalls, crank engine two or three times to make sure that fuel pressure is released.
4. Turn ignition switch OFF and install fuse for fuel pump.

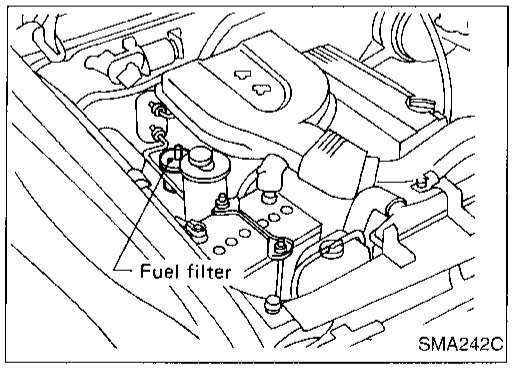

WARNING:
Use rubber gloves to prevent fuel from contacting skin when removing fuel hoses and filter.

5. Loosen fuel hose clamps.
6. Replace fuel filter.

- **Be careful not to spill fuel over engine compartment. Place a shop towel to absorb fuel.**
- **Use a high-pressure fuel filter. Do not use a synthetic resinous fuel filter.**
- **When tightening fuel hose clamps, refer to "Checking Fuel Lines", MA-12.**

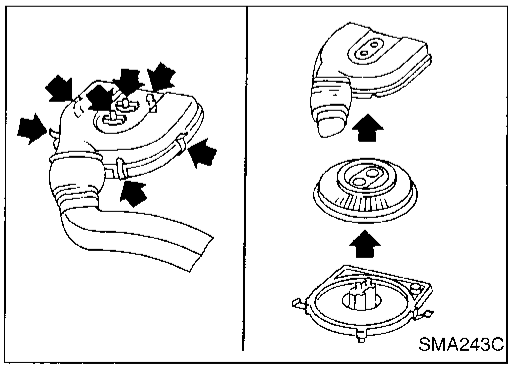

Changing Air Cleaner Filter

The viscous paper filter does not need cleaning between renewals.

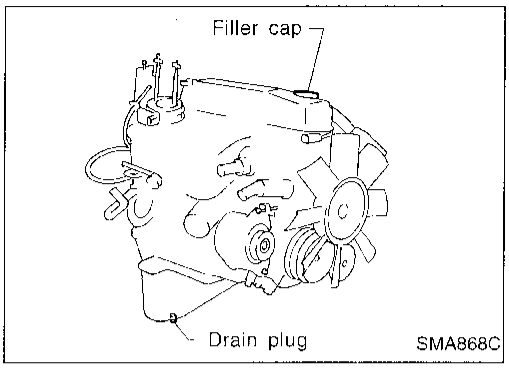

Changing Engine Oil

WARNING:

- **Be careful not to burn yourself, as the engine oil is hot.**
- **Prolonged and repeated contact with used engine oil may cause skin cancer; try to avoid direct skin contact with used oil. If skin contact is made, wash thoroughly with soap or hand cleaner as soon as possible.**

1. Warm up engine, and check for oil leakage from engine components.
2. Remove drain plug and oil filler cap.
3. Drain oil and refill with new engine oil.

Oil specification and viscosity:

- **API SG or SH and Energy Conserving II**
- **API Certification Mark**
- **Refer to "RECOMMENDED FLUIDS AND LUBRICANTS", MA-8.**

Refill oil capacity (Approximately):

Unit: ℓ (US qt, Imp qt)

	2WD	4WD
With oil filter change	3.9 (4-1/8, 3-3/8)	4.1 (4-3/8, 3-5/8)
Without oil filter change	3.5 (3-3/4, 3-1/8)	3.8 (4, 3-3/8)

CAUTION:

- **Be sure to clean drain plug and install with new washer.**
  Drain plug:
  : 29 - 39 N·m (3.0 - 4.0 kg-m, 22 - 29 ft-lb)
- **The refill capacity changes depending on the oil temperature and drain time. Use these values as a reference and be certain to check with the dipstick when changing the oil.**

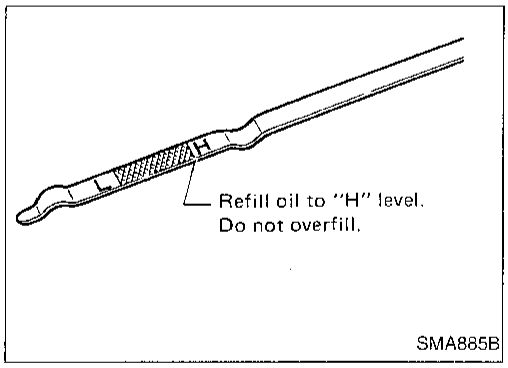

4. Check oil level.
5. Start engine and check area around drain plug and oil filter for oil leakage.
6. Run engine for a few minutes, then turn it off. After several minutes, check oil level.

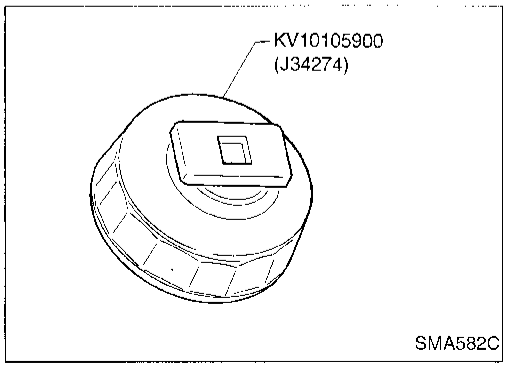

Changing Oil Filter

1. Remove oil filter with Tool.

WARNING:

Be careful not to burn yourself. Engine and engine oil are hot.

Changing Oil Filter (Cont'd)

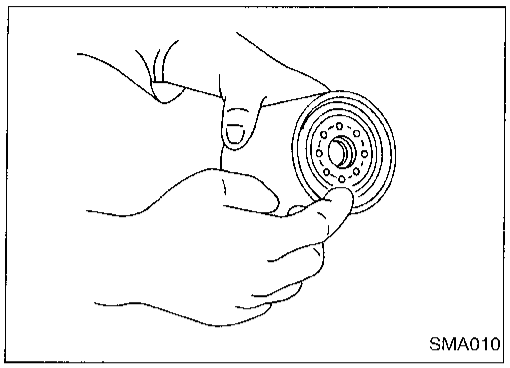

2. Clean oil filter mounting surface on cylinder block. Coat rubber seal of new oil filter with engine oil.

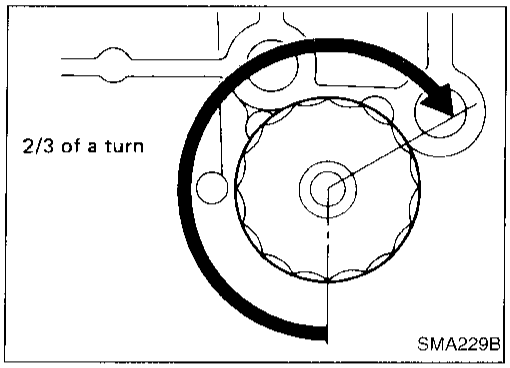

3. Screw in the oil filter until a slight resistance is felt, then tighten additionally more than 2/3 turn.
4. Add engine oil.

Refer to "Changing Engine Oil", MA-13.

- **Clean excess oil from engine.**

Changing Spark Plugs

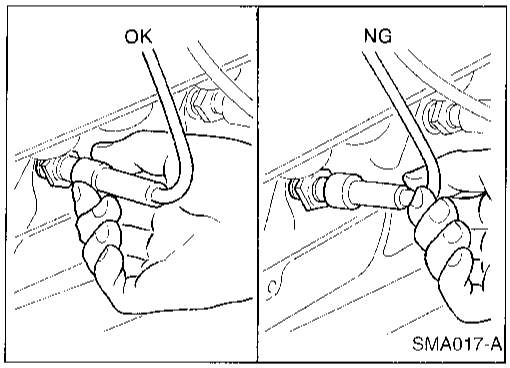

1. Disconnect ignition wires from spark plugs at boot. Do not pull on the wire.

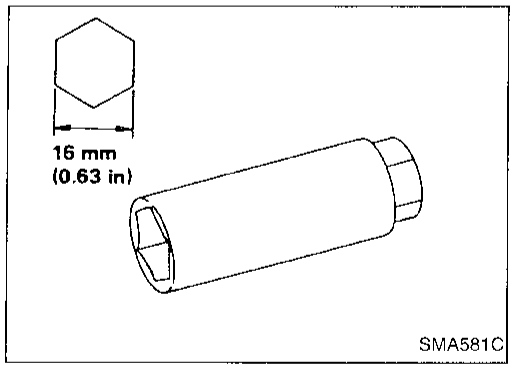

2. Remove spark plugs with spark plug wrench.

Spark plug:

Make	NGK
Standard type	ZFR5E-11
Hot type	ZFR4E-11
Cold type	ZFR6E-11

Use standard type spark plug under normal conditions. The hot type spark plug is suitable when fouling occurs with the standard spark plug under conditions such as:

- frequent engine starts
- low ambient temperature

The cold type spark plug is suitable when spark knock occurs with the standard spark plug under conditions such as:

- extended highway driving
- frequent high engine revolution

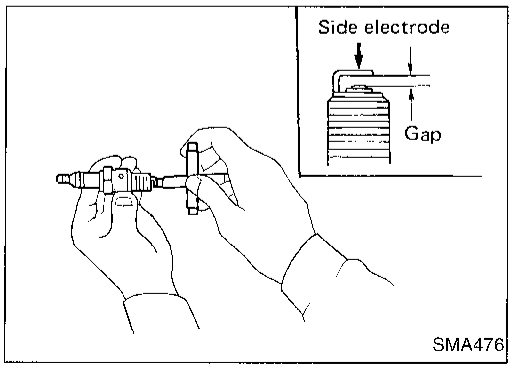

3. Check plug gap of each new spark plug.
   Gap: 1.0 - 1.1 mm (0.039 - 0.043 in)
4. Install spark plugs. Reconnect ignition wires according to numbers indicated on them.
   Spark plug:
   [O]: 20 - 29 N·m (2.0 - 3.0 kg-m, 14 - 22 ft-lb)

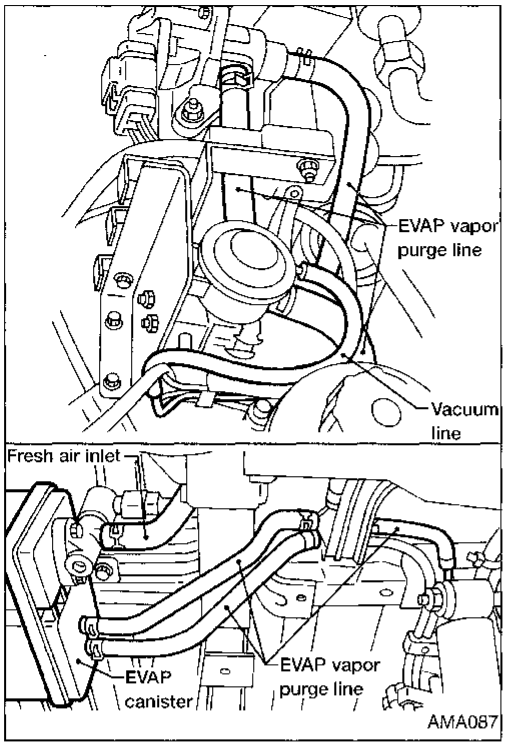

Checking EVAP Vapor Purge Lines

1. Visually inspect EVAP vapor purge lines for improper attachment and for cracks, damage, loose connections, chafing and deterioration.
2. Inspect fuel tank filler cap vacuum relief valve for clogging, sticking, etc.

   Refer to EC section ("EVAPORATIVE EMISSION SYSTEM").

Changing Positive Crankcase Ventilation (PCV) Filter

Remove air cleaner cover and take out PCV filter located inside air cleaner cover. Then install new PCV filter.

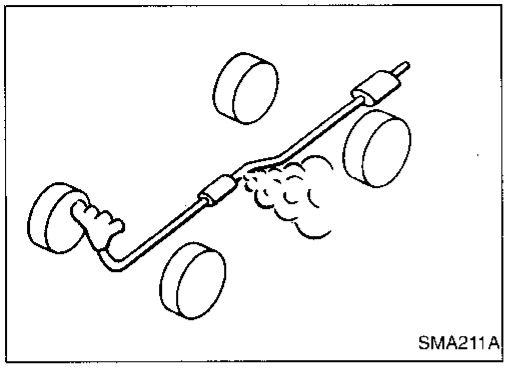

Checking Exhaust System

Check exhaust pipes, muffler and mounting for improper attachment, leaks, cracks, damage, loose connections, chafing or deterioration.

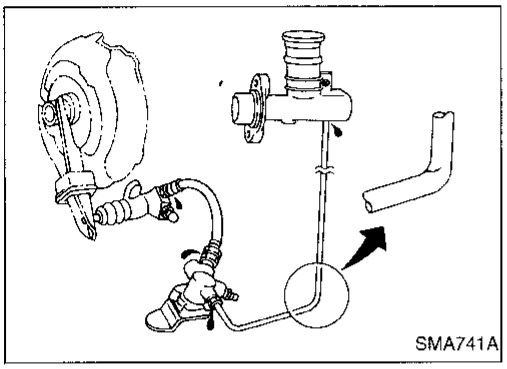

Checking Clutch Fluid Level and Leaks

If fluid level is extremely low, check clutch system for leaks.

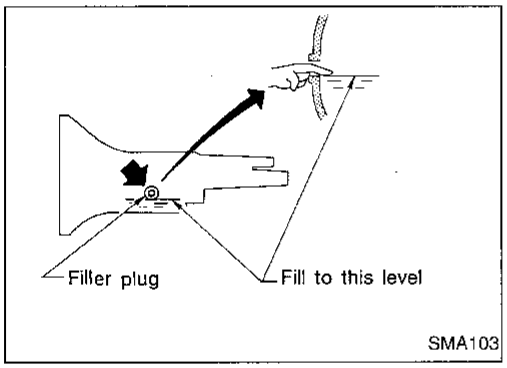

Checking M/T Oil

Check for oil leakage and oil level.

Never start engine while checking oil level.

Filler plug:

[O]: 25 - 34 N·m (2.5 - 3.5 kg-m, 18 - 25 ft-lb)

Changing M/T Oil

1. Drain oil from drain plug and refill with new gear oil.
2. Check oil level.

Oil grade and viscosity:

API GL-4. Refer to "RECOMMENDED FLUIDS AND LUBRICANTS", MA-8.

Oil capacity:

FS5W71C

2WD 2.0 ℓ (4-1/4 US pt, 3-1/2 Imp pt)

4WD 4.0 ℓ (8-1/2 US pt, 7 Imp pt)

Drain plug:

[O]: 25 - 34 N·m (2.5 - 3.5 kg-m, 18 - 25 ft-lb)

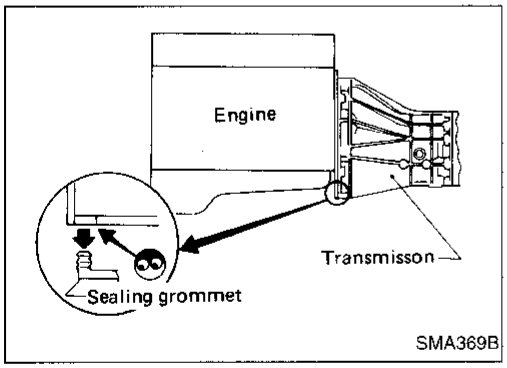

Checking Water Entry — For 4WD models

Check water entry in the clutch housing by removing the sealing grommet whenever driving in deep water or mud.

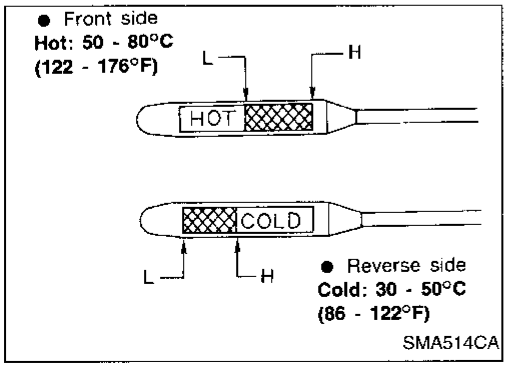

Checking A/T Fluid

1. Warm up engine.
2. Check for fluid leakage.
3. Before driving, fluid level can be checked at fluid temperatures of 30 to 50°C (86 to 122°F) using "COLD" range on dipstick.

a. Park vehicle on level surface and set parking brake.
b. Start engine and move selector lever through each gear position. Leave selector lever in "P" position.
c. Check fluid level with engine idling.
d. Remove dipstick and note reading. If level is at low side of either range, add fluid to the charging pipe.

Checking A/T Fluid (Cont'd)

e. Reinsert dipstick into charging pipe as far as it will go.
f. Remove dipstick and note reading. If reading is at low side of range, add fluid to the charging pipe.

Do not overfill.

4. Drive vehicle for approximately 5 minutes in urban areas.
5. Recheck fluid level at fluid temperatures of 50° to 80°C (122° to 176°F) using "HOT" range on dipstick.
6. Check fluid condition.

- If fluid is very dark or smells burned, refer to AT section for checking operation of A/T. Flush cooling system after repair of A/T.
- If A/T fluid contains frictional material (clutches, bands, etc.), replace radiator and flush cooler line using cleaning solvent and compressed air after repair of A/T. Refer to LC section ("Radiator", "ENGINE COOLING SYSTEM").

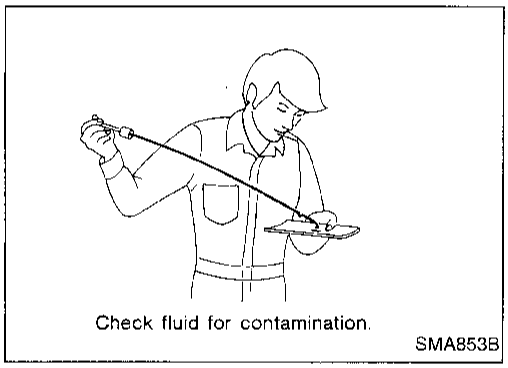
Check fluid for contamination.
SMA853B

Changing A/T Fluid

1. Warm up A/T fluid.
2. Stop engine.
3. Drain A/T fluid from drain plug and refill with new A/T fluid. Always refill same volume with drained fluid.
   Fluid grade and viscosity:
   Nissan Matic "D" (Continental U.S. and Alaska) or Genuine Nissan Automatic Transmission Fluid (Canada). Refer to "RECOMMENDED FLUIDS AND LUBRICANTS", MA-8.
   Fluid capacity (With torque converter):
   7.9 ℓ (8-3/8 US qt, 7 Imp qt)
   Drain plug:
   [O]: 29 - 39 N·m (3.0 - 4.0 kg-m, 22 - 29 ft-lb)
4. Run engine at idle speed for five minutes.
5. Check fluid level and condition. Refer to "Checking A/T Fluid". If fluid is still dirty, repeat steps 2 through 5, MA-16.

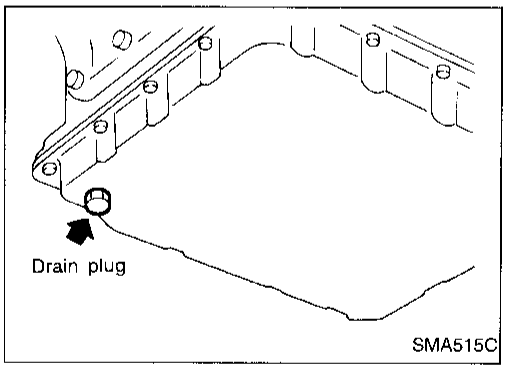

SMA515C

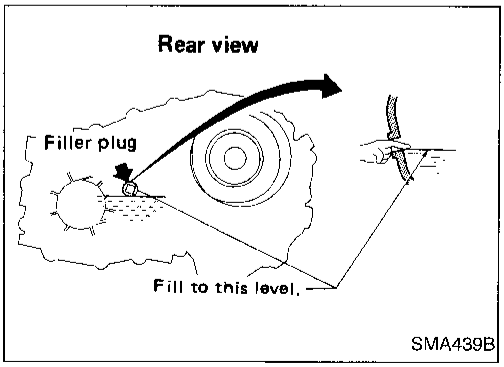

SMA439B

Checking Transfer Fluid

Check for fluid leakage and fluid level.

Automatic Transmission Fluid is used for the transfer in the factory.

Never start engine while checking fluid level.

Filler plug:
[O]: 25 - 34 N·m (2.5 - 3.5 kg-m, 18 - 25 ft-lb)

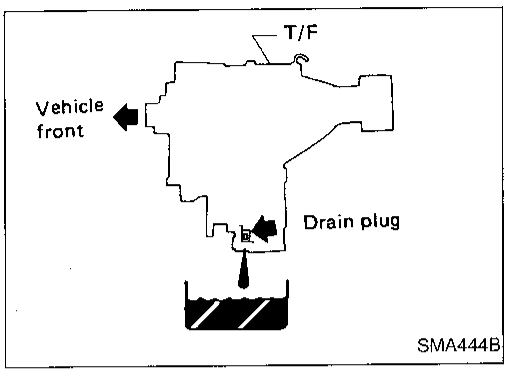

Changing Transfer Fluid

When changing transfer fluid completely, use the following fluid.

Fluid grade:
Type DEXRON™. Refer to "RECOMMENDED FLUIDS AND LUBRICANTS", MA-8.
Fluid capacity:
2.2 ℓ (2-3/8 US qt, 2 Imp qt)
Drain plug:
[O]: 25 - 34 N·m (2.5 - 3.5 kg-m, 18 - 25 ft-lb)

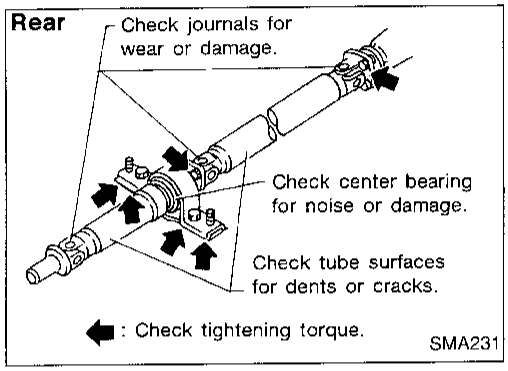

Checking Propeller Shaft

Check propeller shaft for damage, looseness or grease leakage.

Tightening torque: Refer to PD section.

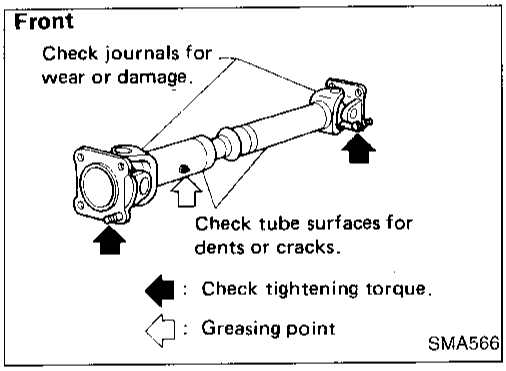

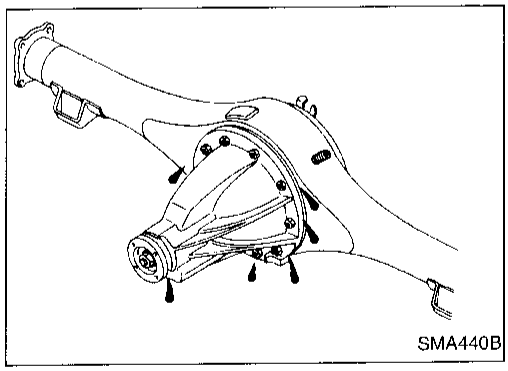

Checking Differential Gear Oil

Check for oil leakage and oil level.

Filler plug:
Front
[O]: 39 - 59 N·m (4 - 6 kg-m, 29 - 43 ft-lb)
Rear
H190A, H233B
[O]: 59 - 98 N·m (6 - 10 kg-m, 43 - 72 ft-lb)
C200
[O]: 39 - 59 N·m (4 - 6 kg-m, 29 - 43 ft-lb)

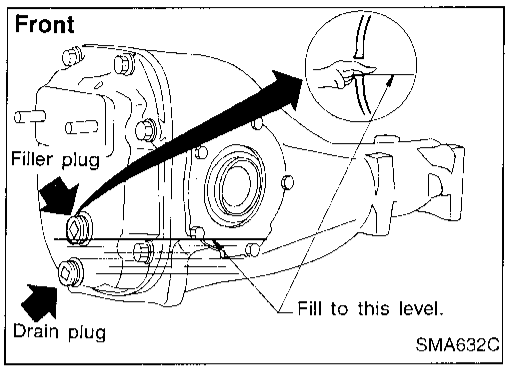

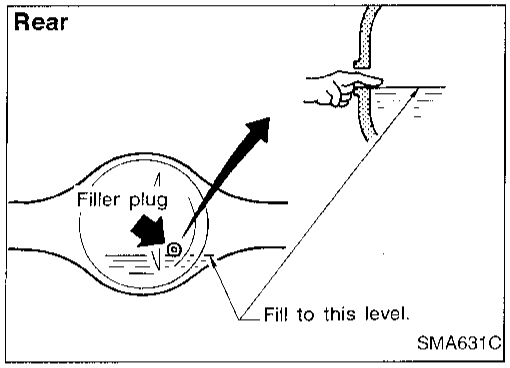

Changing Differential Gear Oil

1. Drain oil from drain plug and refill with new gear oil.
2. Check oil level.

Oil grade and viscosity:
See "RECOMMENDED FLUIDS AND LUBRICANTS", MA-8.

Oil capacity:
Front
1.3 ℓ (2-3/4 US pt, 2-1/4 Imp pt)
Rear
H190A
1.5 ℓ (3-1/8 US pt, 2-5/8 Imp pt)
C200
1.3 ℓ (2-3/4 US pt, 2-1/4 Imp pt)
H233B
2.8 ℓ (5-7/8 US pt, 4-7/8 Imp pt)

Drain plug:
Front
: 39 - 59 N·m (4 - 6 kg-m, 29 - 43 ft-lb)
Rear
: 59 - 98 N·m (6 - 10 kg-m, 43 - 72 ft-lb)

Limited-slip differential gear

- Use only approved limited-slip differential gear oil.
- Limited-slip differential identification.

(1) Lift both rear wheels off the ground.
(2) Turn one rear wheel by hand.
(3) If both rear wheels turn in the same direction simultaneously, vehicle is equipped with limited-slip differential.

Balancing Wheels

Adjust wheel balance using the road wheel center.

Wheel balance (Maximum allowable unbalance):
Refer to SDS, MA-24.

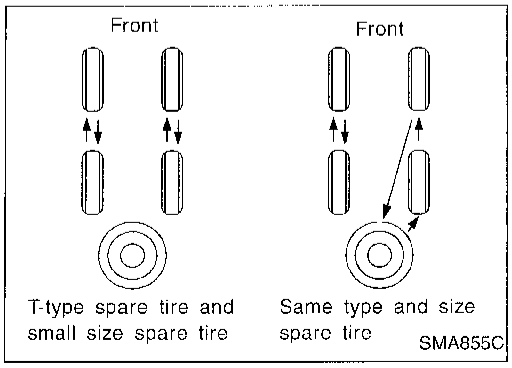

Tire Rotation

- **After rotating the tires, adjust the tire pressure.**
- **Retighten the wheel nuts after the aluminum wheel has been run for the first 1,000 km (600 miles) or if a flat tire occurs.**
- **Do not include the T-type spare tire and small size spare tire when rotating the tires.**

Wheel nuts:
: 118 - 147 N·m (12 - 15 kg-m, 87 - 108 ft-lb)

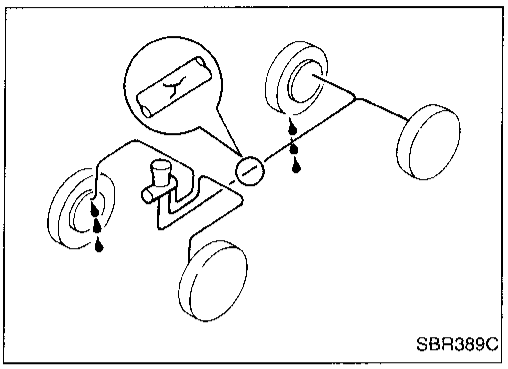
SBR389C

Checking Brake Fluid Level and Leaks

If fluid level is extremely low, check brake system for leaks.

Checking Brake System

Check brake fluid lines and parking brake cables for improper attachment, leaks, chafing, abrasion, deterioration, etc.

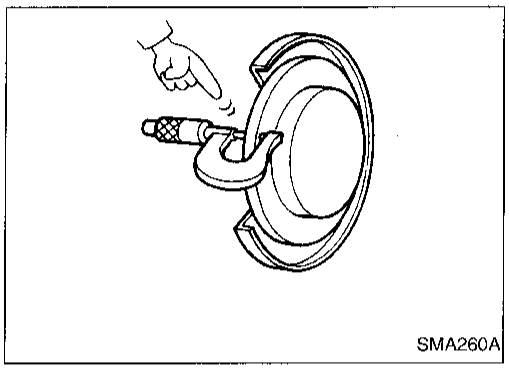
SMA260A

Checking Disc Brake

ROTOR

Check condition and thickness.

Minimum thickness:

CL28VA	**20 mm (0.79 in)**
CL28VD	**24 mm (0.94 in)**

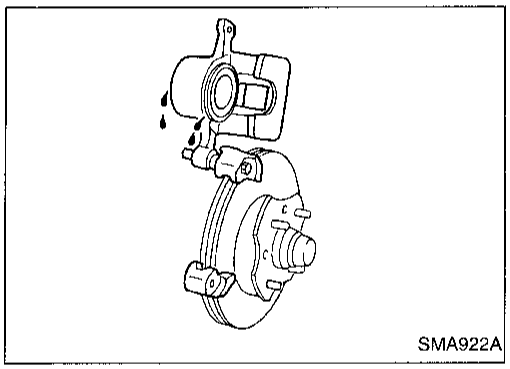
SMA922A

CALIPER

Check for leakage.

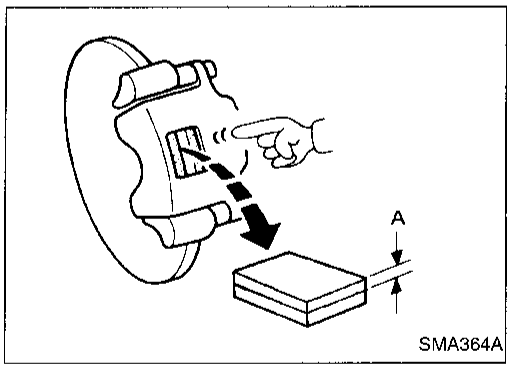

SMA364A

PAD

Check wear or damage.

Minimum thickness: 2 mm (0.08 in)

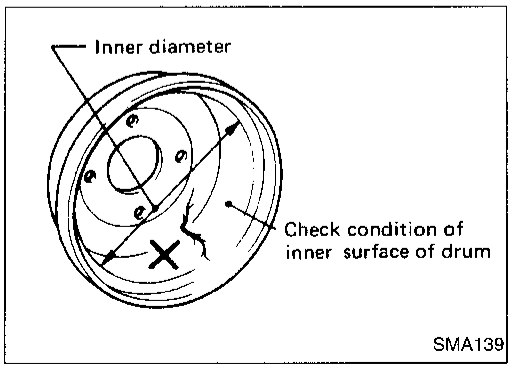

SMA139

Checking Drum Brake

WHEEL CYLINDER

Check for leakage.

DRUM

Check condition and inner surface.

Drum repair limit (Maximum inner diameter):

LT26B	**261.5 mm (10.30 in)**
LT30A	**296.5 mm (11.67 in)**

Checking Drum Brake (Cont'd)

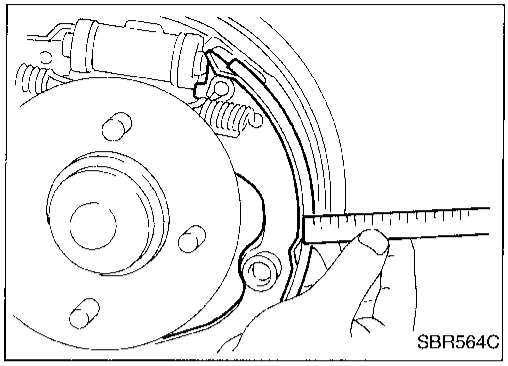

LINING

Check wear or damage.

Lining wear limit (Minimum thickness):
1.5 mm (0.059 in)

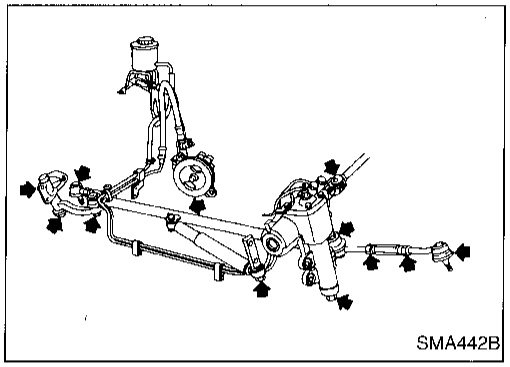

Checking Steering Gear and Linkage

STEERING GEAR

- Check gear housing and boots for looseness, damage or grease leakage.
- Check connection with steering column for looseness.

STEERING LINKAGE

- Check ball joint, dust cover and other component parts for looseness, wear, damage or grease leakage.

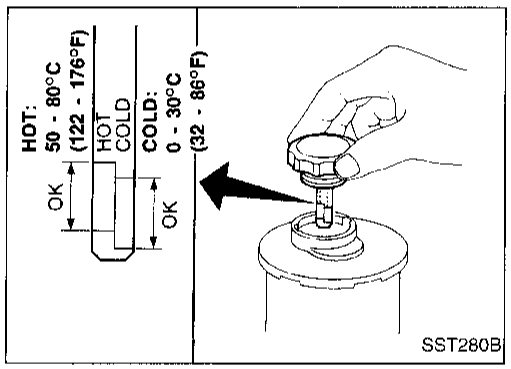

Checking Power Steering Fluid and Lines

- Check fluid level with engine off.
- Check fluid level with dipstick on reservoir cap. Use "HOT" range at fluid temperatures of 50 to 80°C (122 to 176°F). Use "COLD" range at fluid temperatures of 0 to 30°C (32 to 86°F).

CAUTION:

- **Do not overfill.**
- **Recommended fluid is Automatic Transmission Fluid type "DEXRON™ IIE", "DEXRON™ III" or equivalent.**

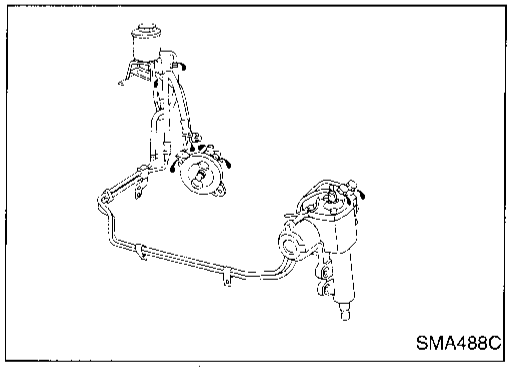

- Check lines for improper attachment, leaks, cracks, damage, loose connections, chafing or deterioration.

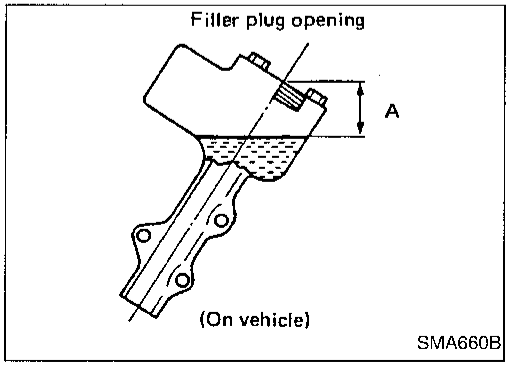

Checking Steering Gear Oil Level and Leaks

- Check steering gear for oil level and leakage.
- Check oil level.

Oil level:
Distance "A"
20 mm (0.79 in) or less

Be careful not to overflow gear oil when filling up.

Lubricating Hood Latches, Locks and Hinges

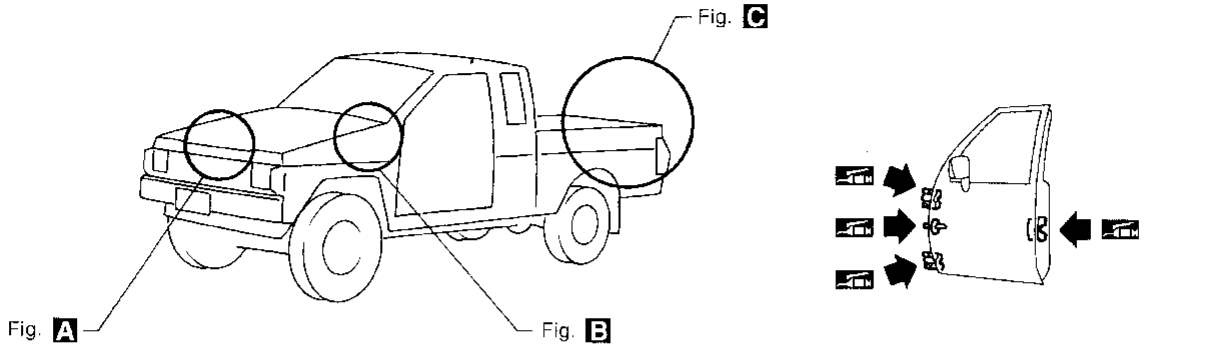

: Grease-up points

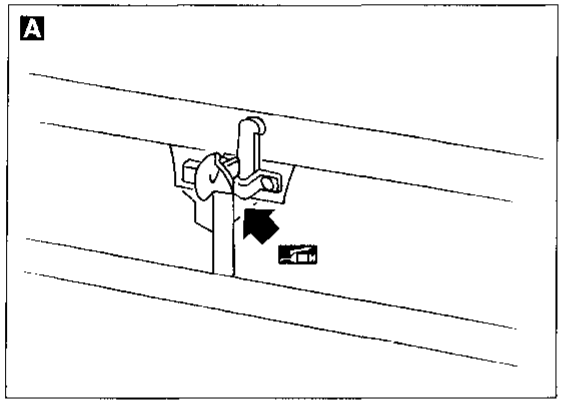

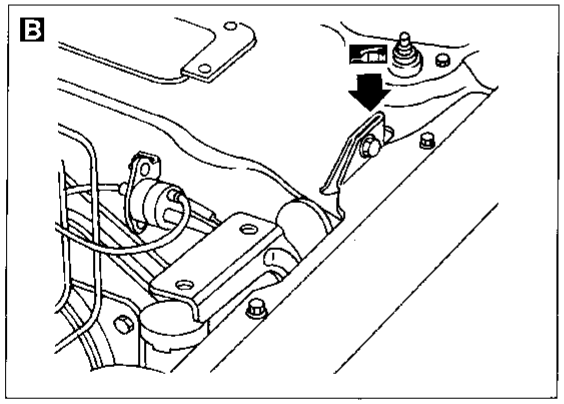

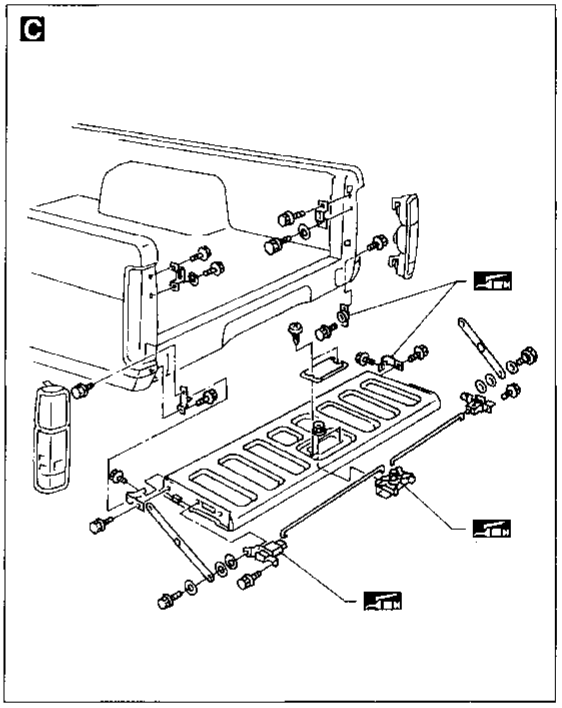

SMA851C

Checking Seat Belts, Buckles, Retractors, Anchors and Adjusters

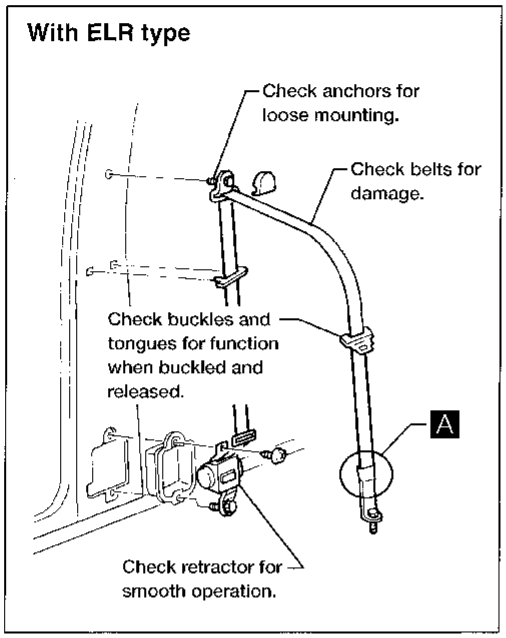

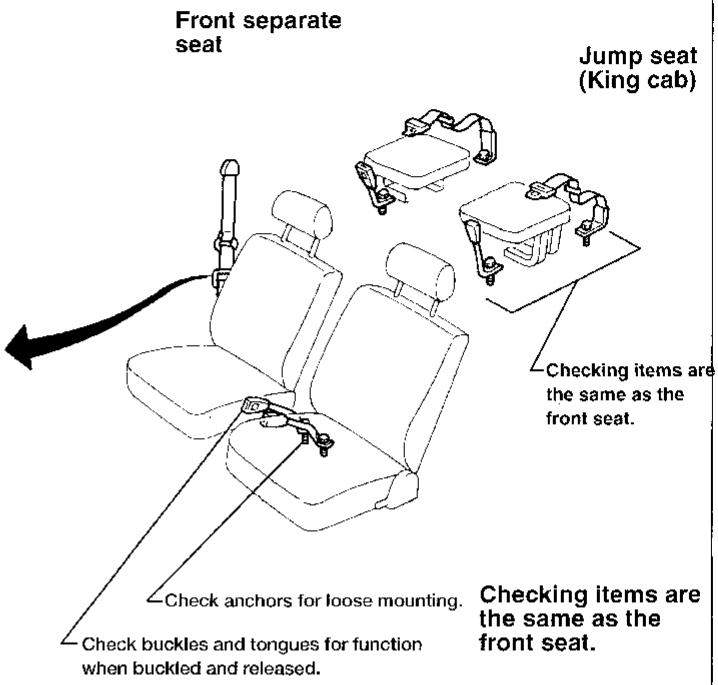

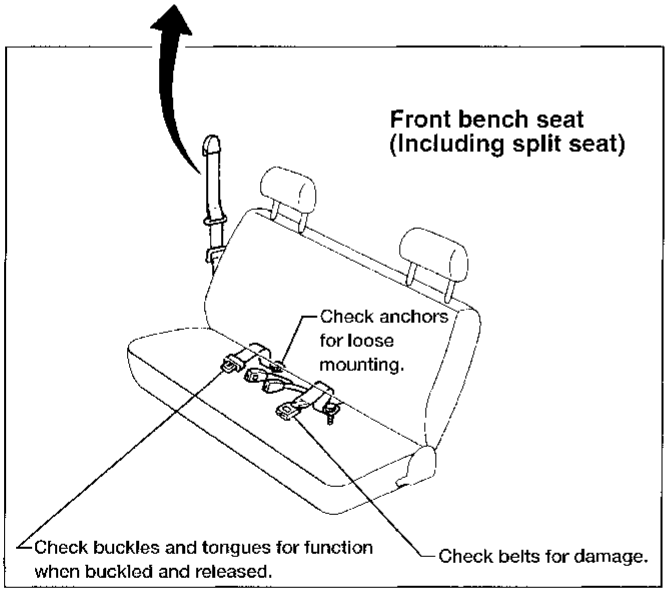

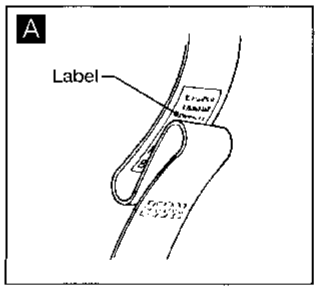

For front seat belt, shock absorber type belt has been used. Replace the belt when loop has been pulled out and "REPLACE BELT" is visible because this seat belt has a loop of webbing under the sleeve.

CAUTION:

1. If the vehicle has collided or overturned, replace the entire belt assembly, regardless of nature of accident.
2. If the condition of any component of a seat belt is questionable, do not repair seat belt, but replace it as a belt assembly.
3. If webbing is cut, frayed, or damaged, replace belt assembly.
4. Do not spill drinks, oil, etc. on inner lap belt buckle. Never oil tongue and buckle.
5. Use a NISSAN genuine seat belt assembly.

Anchor bolt:

: 24 - 31 N•m (2.4 - 3.1 kg-m, 17 - 23 ft-lb)

AMA088

Engine Maintenance

INSPECTION AND ADJUSTMENT

Drive belt deflection

Unit: mm (in)

	Used belt deflection		Deflection of new belt
	Limit	Deflection after adjustment	
Generator	17 (0.67)	10 - 12 (0.39 - 0.47)	8 - 10 (0.31 - 0.39)
Air conditioner compressor	16 (0.63)	10 - 12 (0.39 - 0.47)	8 - 10 (0.31 - 0.39)
Power steering oil pump	15 (0.59)	9 - 11 (0.35 - 0.43)	7 - 9 (0.28 - 0.35)
Applied pushing force	98 N (10 kg, 22 lb)		

Spark plug

Standard type	ZFR5E-11
Hot type	ZFR4E-11
Cold type	ZFR6E-11
Plug gap	1.0 - 1.1 mm (0.039 - 0.043 in)

Chassis and Body Maintenance

INSPECTION AND ADJUSTMENT

Wheel balance

Maximum allowable unbalance	Dynamic (At rim flange) g (oz)	10 (0.35) (one side)
	Static g (oz)	20 (0.71)